Vista 1500 BTW Freestanding Bath

Overflow

Product Image



Product Details

Code:	**FS730115**
Brand:	Argent
Range:	Vista
Warranty:	10 Years*
Product Length:	1,500 mm
Product Width:	800 mm
Product Height:	600 mm
Litre Capacity:	340 L

Additional Features

Required Product
2 Piece 40mm Bath Waste

Recommended Products

Additional Notes
- Sanitary Grade Acrylic
- Gloss Finish
- Reinforced Waste Area
- Solid Base Support System
- Stainless Steel adjustable feet
- Fully Enclosed Back

Installation Instructions
* Waste Not Included
* Bath weight 44kg

Technical Specification

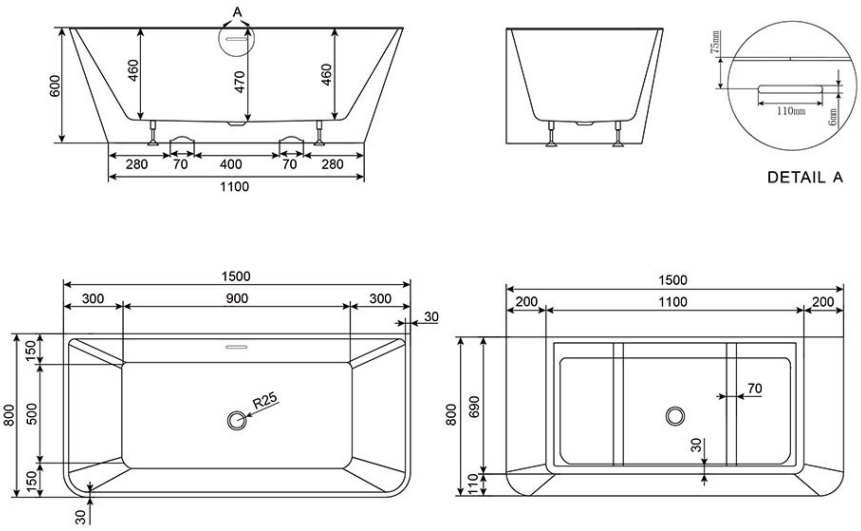

*Please visit **argentaust.com.au/warranty** to view the full warranty

Note: All dimensions are in millimetres and are subject to normal manufacturing variations. It is reccommended to use the physical product measurements for cut-outs and rough-ins as the technical details shown may differ from the actual product. Use acetic cured silicone sealant. Do not use epoxy type adhesives. Clean with damp cloth. Do not use abrasive cleaners, liquids or pastes.