Argent
Villeroy & Boch Group

# EVO

SMART TOILET SUITES



## THE NEXT GENERATION IN SMART TOILET DESIGN





# THE EVOLUTION OF THE SMART TOILET

**1900s**

Popular in Europe for many decades, the traditional bidet was a separate bowl situated next to the toilet which the user would straddle either facing forward or backwards to rinse after using the toilet. A towel was then used for drying.

**1980s**

Originating in Japan, the combination toilet - historically referred to as the washlet - is a combination of a Western style toilet and a bidet.

**NOW**

The Argent Evo Smart Toilet is the next generation in smart toilet design - combining beautiful aesthetics with superior functionality to allow a highly personalised experience every time.

The latest addition to our Smart Living range, the Evo Smart Toilet, is brimming with features that take it from being a comfort installation to a modern must-have.

# TEMPERATURE SETTINGS

## WATER TEMPERATURES

34.5 35.5 36.5 37.5 38.5

## HEATED DRYING TEMPERATURES

37.8 40.8 43.9 45.4 50.9

## SEAT TEMPERATURES

34.5 35.5 36.5 37.5 38.5



# FEATURES & BENEFITS



## MULTIFUNCTION CLEANING

Front or back, massage or pulsating, fully adjustable multi function cleaning means you get the perfect clean and dry every time.



## HIGH QUALITY CERAMIC

High ceramic surface tension means a smooth surface, ensuring the pan is easy to clean.



## USER DETECTION SENSOR

Fitted as a safety feature to automatically stop functions when you leave the seat.



## HEATED SEAT

Fully adjustable seat temperature control with immediate warming,



## SOFT CLOSE SEAT

Enjoy a seamless experience a every time with the soft close seat.

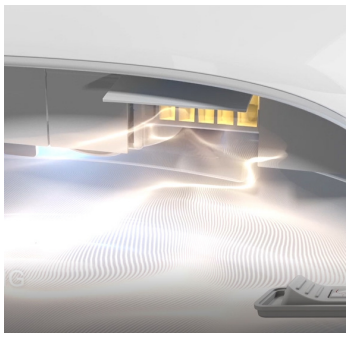

## HEATED DRYING

The heated drying feature allows users to dry by warm air for a hygienic and comfortable experience.



## INTEGRATED SIDE CONTROL PANEL

Control the smart toilet without the remote.

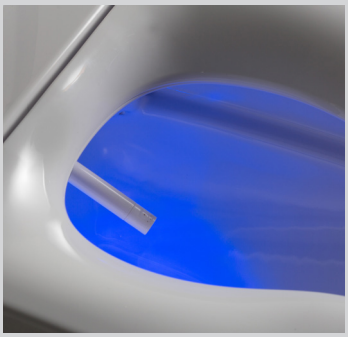

## SINGLE WATER SUPPLY

Argent Smart Toilets have a single water supply, meaning that the water can be turned off without dismantling the toilet.



## HEATED WATER

Water can be adjusted from ambient to warm.



## DEODORISER CARTRIDGE

Removes unwanted odours with an active carbon filter.



## SELF CLEANING

The nozzle pre-cleans before and after each use to ensure the highest level of hygiene.



## RIMLESS TECHNOLOGY

Hygienic flush rimless technology ensures a complete, even clean every flush.



# KEY FUNCTIONS

The Evo Smart Toilet is brimming with functions that allow the user to enjoy a truly personalised experience.



## MASSAGE FUNCTION

Allows you to choose from gentle or firm massage for your perfect clean.



## PULSATING FUNCTION

Provides a swing motion, pulsing forward and back for a complete clean.



## ADJUSTABLE WATER TEMPERATURE

Users can adjust the water temperature in five stages from ambient to warm.



## REAR WASH

The rear wash nozzle has five fully adjustable positions with multiple water temperature and air flow settings.



## FRONT WASH

Designed for the female user, the front wash nozzle has five fully adjustable positions with multiple water temperature and air flow settings.



## ADJUSTABLE HEATED SEAT

Offers fully adjustable seat temperature control with immediate warming.



## ADJUSTABLE DRYER TEMPERATURE

Adjustable speed and temperature control for a hygienic and hands-free drying experience.



## ADJUSTABLE NOZZLE POSITIONS

Five fully adjustable positions to provide a complete clean from front to back.



## ADJUSTABLE WATER PRESSURE

Water pressure from soft to firm for your ultimate comfort.



## NIGHT LIGHT

The night light fitted in the bowl of the toilet automatically activates when the room is dark.



## USER DETECTION SENSOR

With your safety in mind all functions will automatically stop should you leave the seat.



## AUTO DEODERISER

Active carbon filter removes unwanted odours.

# ARGENT EVO WALL FACED SMART TOILET

The Argent Evo Wall Faced Smart Toilet looks like a normal toilet but is brimming with smart features and benefits. The smooth, clean lines make it perfect for modern bathrooms and the concealed smart cistern means you only have to clean half a toilet.

Your choice of flush plate designs including Kubic and Round allows you the opportunity to customise the overall aesthetic of your installation, while the smart features and benefits that you can control via the side panel or remote allow you to truly personalise your experience.




**AF42IN38WB** WELS 4 Star 4.5/3L




**AF423300WB** WELS 4 Star 4.5/3L

ARGENT EVO WALL FACED WITH **SMART TOILET SYSTEM**

Includes:
Smart Pan & Seat, Remote and Argent 80 Smart Toilet Cistern

Pair your system with one of the following Argent Flush Plates

**KUBIC**


IN38785
Chrome


IN38785BN
Brushed
Nickel


IN38785WH
White


IN38785MB
Matte Black


IN38785GM
Gun Metal


IN38785BG
Brushed
Gold

**EDGE**


IN38780
Chrome

**ROUND**


IN38779CH
Chrome


IN38779BN
Brushed
Nickel


IN38779WH
White


IN38779MB
Matte Black


IN38779GM
Gun Metal

ARGENT EVO WALL FACED WITH **VISMART TOILET SYSTEM**

Includes:
Smart Pan & Seat, Remote and Villeroy & Boch ViConnect 80 Smart Toilet Cistern

Pair your system with one of the following Villeroy & Boch Flush Plates

**E100**


92248561
Chrome


92248569
Satin


92248568
White

**E200**


92249061
Chrome


92249069
Satin


92249068
White


922490AN
Matte Black

**E300**


92218061
Chrome


92218068
White


92218069
Satin


922169AN
Black, satin
button


922169N5
White, satin
button


922169D8
Anthracite,
satin button


92216168
White, chrome
button

# ARGENT EVO WALL HUNG SMART TOILET

The Argent Evo Wall Hung Smart Toilet is sleek and modern with smooth, defined lines and a concealed smart cistern and frame. The wall-hung design allows the pan to sit above the floor, offering a luxurious alternative to the standard toilet and making it effortless to clean underneath.

Your choice of flush plate designs including Kubic and Round allows you the opportunity to customise the overall aesthetic of your installation, while the smart features and benefits that you can control via the side panel or remote allow you to truly personalise your experience.

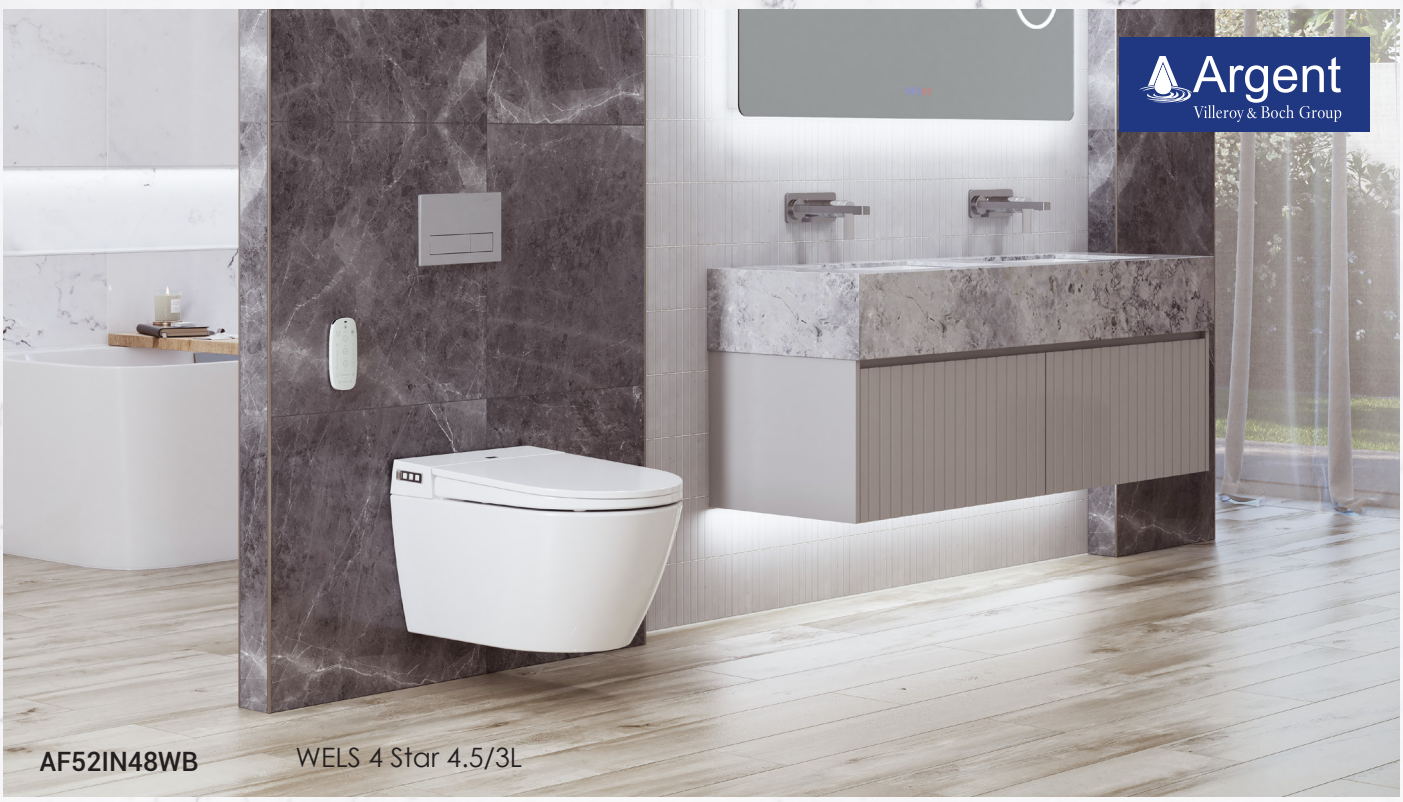


**AF52IN48WB** WELS 4 Star 4.5/3L




**AF523500WB** WELS 4 Star 4.5/3L

## ARGENT EVO WALL HUNG WITH **SMART TOILET SYSTEM**

Includes:
Smart Pan & Seat, Remote and Argent 80 Smart Toilet Cistern

Pair your system with one of the following Argent Flush Plates

**KUBIC**


IN38785
Chrome

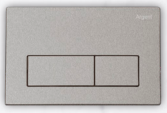
IN38785BN
Brushed
Nickel


IN38785WH
White


IN38785MB
Matte Black


IN38785GM
Gun Metal


IN38785BG
Brushed
Gold

**EDGE**


IN38780
Chrome

**ROUND**


IN38779CH
Chrome


IN38779BN
Brushed
Nickel


IN38779WH
White


IN38779MB
Matte Black


IN38779GM
Gun Metal

## ARGENT EVO WALL HUNG WITH **VISMART TOILET SYSTEM**

Includes:
Smart Pan & Seat, Remote and Villeroy & Boch ViConnect 80 Smart Toilet Cistern

Pair your system with one of the following Villeroy & Boch Flush Plates

**E100**


92248561
Chrome


92248569
Satin


92248568
White

**E200**


92249061
Chrome


92249069
Satin


92249068
White


922490AN
Matte Black

**E300**

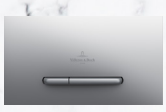
92218061
Chrome


92218068
White


92218069
Satin


922169AN
Black, satin button


922169N5
White, satin
button


922169D8
Anthracite,
satin button


92216168
White, chrome
button

# REMOTE FUNCTIONS

The remote control is uncomplicated and intuitive, allowing users the ability to control all adjustable facets of the smart toilet seat. Functions on the remote include the front and rear wash, water and air temperature adjustability and nozzle positions.

Each function is available in five stages, allowing you to choose from ambient to warm water and air, soft to firm water and air pressure and massage or pulsating swing functions for a truly personalised experience.

The remote allows you to control the heated seat and nozzle positions, ensuring a total clean from front to back.

Intuitive in design, the remote lights up when you have selected a function, allowing you to easily identify your selected settings.

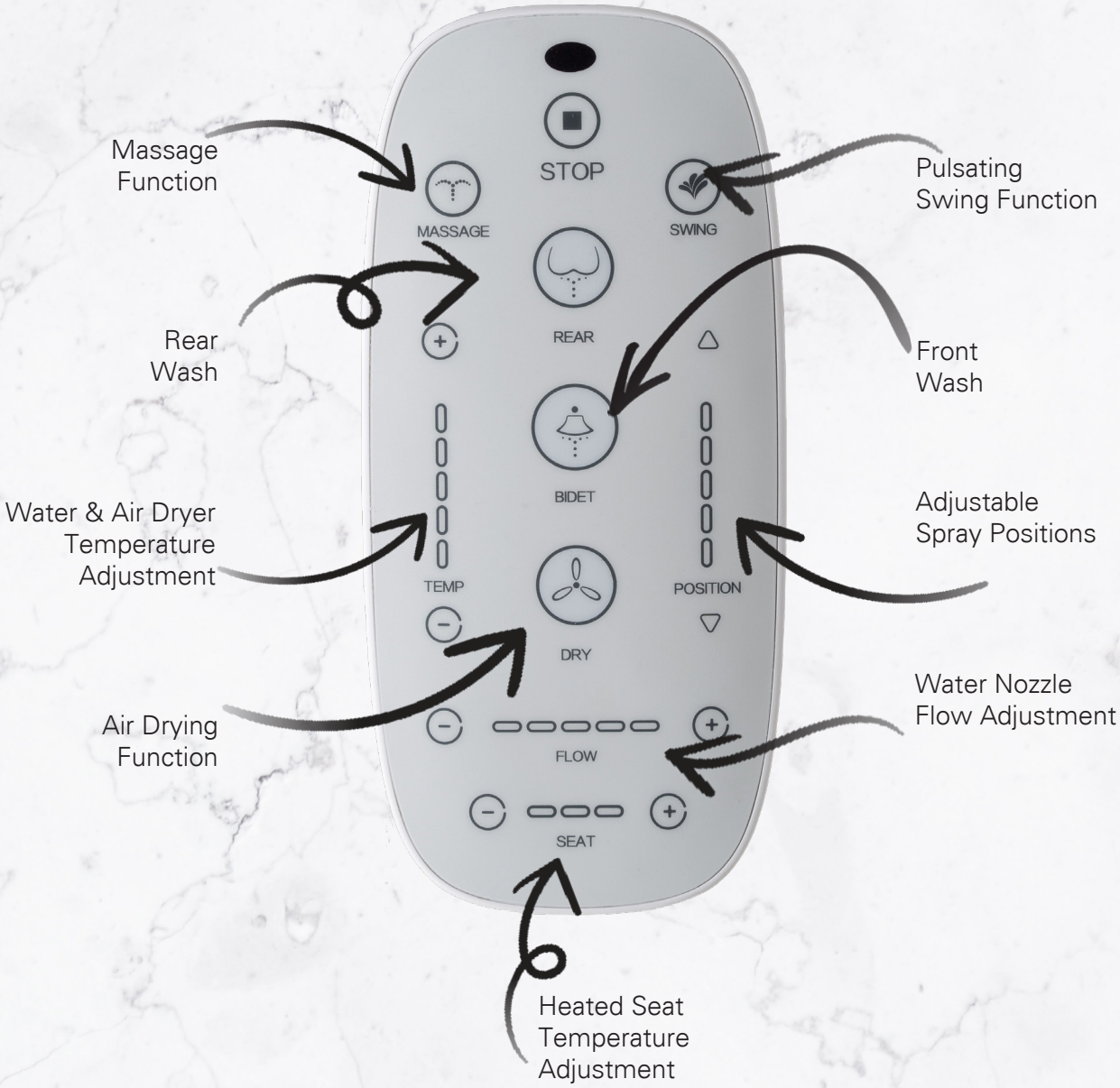

# FEATURES SUMMARY





| Brand | Argent | Argent |
|---|---|---|
| Model Number | AF421001S4B | AF521001S4B |
| | WALL FACED | WALL HUNG |
| Watermark | WM-040263 | WM-040263 |
| WELS | 4.5/3, 3.3 AVE FLUSH | 4.5/3, 3.3 AVE FLUSH |
| Registration # | L06842 | L06843 |
| Warranty - years | 10 Ceramic /3 seat/1 labour | 10 Ceramic /3 seat/ 1 labour |
| In wall Cistern | Smart Cistern | Smart Cistern |
| Water Supply | Concealed | Concealed |
| Power Supply | Concealed | Concealed |
| Rear Wash | ✓ | ✓ |
| Front Wash | ✓ | ✓ |
| Massage Function | ✓ | ✓ |
| Pulsating Swing Function | ✓ | ✓ |
| Adjustable Water Temperature | 5 settings | 5 settings |
| Temperature display | ✓ | ✓ |
| Adjustable Flow Rate | 5 settings | 5 settings |
| Adjustable Spray Positions | 5 positions | 5 positions |
| Air Drying Function | 5 settings | 5 settings |
| Adjustable Dryer Temperature | 5 positions | 5 positions |
| Deoderiser | ✓ | ✓ |
| Nozzle Self Cleaning | ✓ | ✓ |
| Nozzle Manual Cleaning | ✓ | ✓ |
| Night Light | ✓ | ✓ |
| Ambient Light | ✓ | ✓ |
| Intelligent Power Saving | ✓ | ✓ |
| Seat Heating | 5 Settings | 5 Settings |
| Soft Close Seat | ✓ | ✓ |
| Remote Control | ✓ | ✓ |
| Side Control Panel | ✓ | ✓ |
| Easy Clean Ceramic | ✓ | ✓ |
| Hygienic Flush Rimless Technology | ✓ | ✓ |
| RPZD Valve Required | No * | No * |
| Inverted Circuit | ✓ | ✓ |

* includes air gap assessed to comply with AS2845.2 : 2010

# SPECIFICATIONS



Argent Evo Wall Faced
Smart Toilet System

WELS 4 Star 4.5/3L
S Trap 100 - 200mm
P Trap 180mm
**AF421001S4B**

Argent 80 Smart Cistern
**IN38905WB**
S & P Trap / Soft Close Seat
& Remote

**AF42IN38WB**



Argent Evo Wall Faced
ViSmart Toilet System

WELS 4 Star 4.5/3L
S Trap 100 - 120mm
P Trap 180mm
**AF421001S4B**

Villeroy & Boch
ViConnect 80 Smart Cistern
**92233300WB**
S & P Trap / Soft Close Seat
& Remote

**AF423300WB**

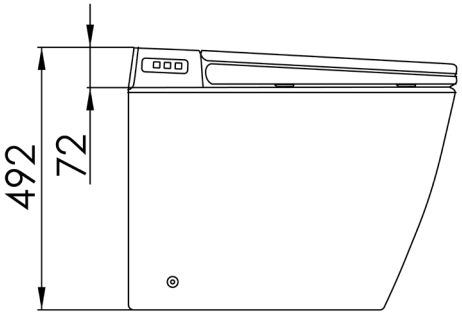


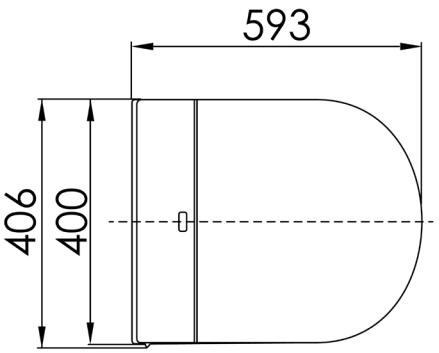




Argent Evo Wall Hung
Smart Toilet System

WELS 4 Star 4.5/3L

**AF521001S4B**

Argent 80 Smart Cistern
& Frame

IN48905WB

P Trap / Soft Close Seat
& Remote

**AF52IN48WB**



Argent Evo Wall Hung
ViSmart Toilet System

WELS 4 Star 4.5/3L

**AF521001S4B**

Villeroy & Boch
ViConnect 80 Smart
Cistern & Frame

**92233500WB**

P Trap / Soft Close Seat
& Remote

**AF523500WB**

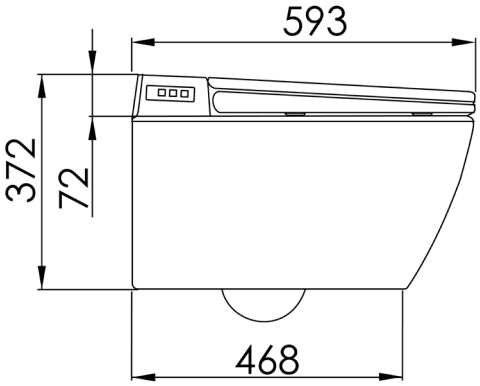


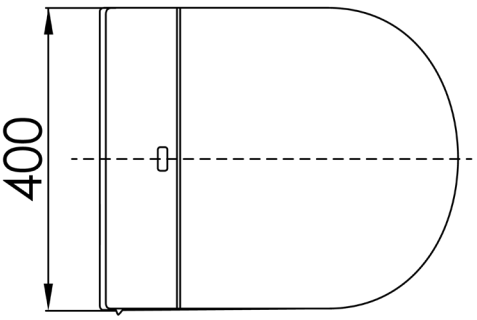

# SPECIFICATIONS

| SETTINGS | | | | | | |
|---|---|---|---|---|---|---|
| FEATURE | OFF | 1 | 2 | 3 | 4 | 5 |
| SEAT TEMPERATURE | - | 34.5℃±1.5℃ | 35.5℃±1.5℃ | 36.5℃±1.5℃ | 37.5℃±1.5℃ | 38.5℃±1.5℃ |
| WATER TEMPERATURE | - | 34.5℃±1.5℃ | 35.5℃±1.5℃ | 36.5℃±1.5℃ | 37.5℃±1.5℃ | 38.5℃±1.5℃ |
| DRYER TEMPERATURE | - | 37.8℃±1.5℃ | 40.8℃±1.5℃ | 43.9℃±1.5℃ | 45.4℃±1.5℃ | 50.9℃±1.5℃ |

Max/min temperarure per function

| | Min Value | Max Value | Default Value | Power Saver Mode |
|---|---|---|---|---|
| SEAT TEMPERATURE | 32 | 40 | 36 | 24 |
| WATER TEMPERATURE | 32 | 40 | 36 | 24 |
| DRYER TEMPERATURE | 37 | 51 | / | / |

# SPARE PARTS

Each unit is sold with the following spare parts.

Nozzle





Screw caps

The below additional spare parts can also be ordered.



Carbon Filter



Cartridge cover



Remote control



Replacement seat structure

Argent
Villeroy & Boch Group




**CUSTOMER CENTRAL**
Level ONE, 22 Arthur Street
Fortitude Valley, QLD 4006
1300 364 748
support@customer-central.com.au

**QUEENSLAND**
Level ONE, 22 Arthur Street
Fortitude Valley, QLD 4006
1300 364 748

**NEW SOUTH WALES**
Suite G01, 1/190 Bourke Rd,
Alexandria NSW 2015
(02) 8394 5800

**VICTORIA**
198 Coventry Street
South Melbourne, VIC 3205
(03) 9250 1600

**WESTERN AUSTRALIA**
57 Collingwood Street
Osborne Park, WA 6017
(08) 9445 0500

**www.argentaust.com.au**