Villeroy & Boch
1748

O.NOVO VITA

Design knows no barriers



O.NOVO VITA



Accessible bathroom design has a new standard: O.novo Vita. The collection comprises versatile bathroom ceramics for special requirements. Attractive details, such as the handles on the 800 ceramic handbasin, offer extra comfort for every hospital or cross-generational bathroom.

O.novo Vita complies with all the standards for accessible bathrooms without compromising on style. For beautiful barrier-free bathrooms.



O.NOVO VITA 800 BASIN

41208001CB
800x550mm 1 Taphole

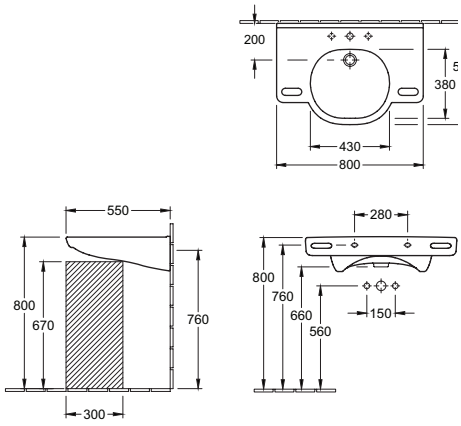

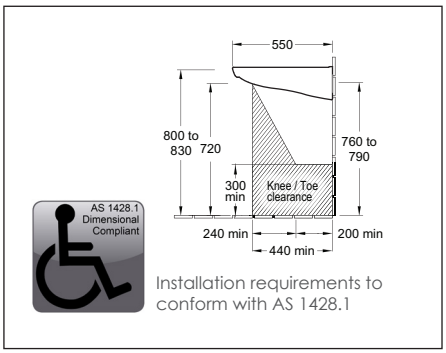



O.NOVO VITA 560 BASIN

41195501CB
560x550mm 1 Taphole
*** Concealed finger groove under front edge**

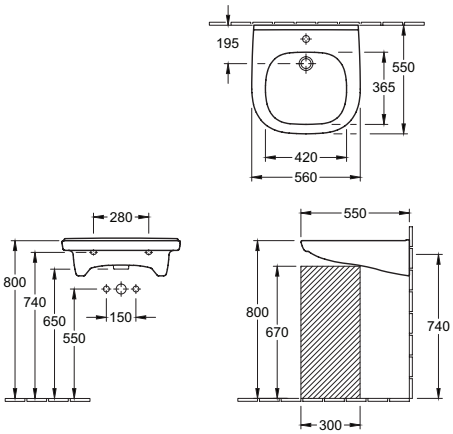

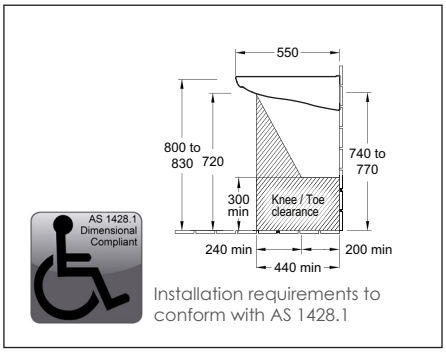

VILLEROY & BOCH AG

Unternehmensbereich Bad und Wellness
Postfach 1230 · 66689 Mettlach · GERMANY
Telefon +49 68 64 81-1500 · Fax +49 68 64 81-1484
verkauf@villeroy-boch.com

WWW.VILLEROY-BOCH.COM

Villeroy & Boch
1748

Customer Central
Technical Hotline 1800 356 717
support@customer-central.com.au
www.argentaust.com.au

Customer Central	Melbourne	Sydney	Brisbane	Perth
Ph: 1300 364 748	Ph: 03 9250 1600	Ph: 02 8394 5800	Ph: 07 3252 6101	Ph: 08 9445 0500
Fx: 1300 656 057	Fx: 03 9250 1699	Fx: 02 8394 5888	Fx: 1300 656 057	Fx: 08 9445 0510

Argent

BROONOVOVITA2015