COMPACT HF ELECTRONIC URINAL FLUSH VALVE TROUBLE SHOOTING AND SPARE PARTS GUIDE

IMPORTANT POINTS TO REMEMBER RELATING TO THE COMPACT HF ELECTRONIC URINAL FLUSH VALVE

If the unit has received a power surge or spike and the light on the control module is constantly flashing, please follow the below instructions.

This process also needs to be completed whenever you change an existing part. (The control module must do a complete reset/recalibrate, in order to register the new component)

PLEASE REMEMBER WHEN RESETTING THE CONTROL MODULE, YOU NEED TO TURN THE POWER OFF / DISCONNECT THE POWER FOR 20MINS!

- Before you turn the power off ensure that the stop cock/isolating valve (the brass flat screw above the solenoid) is horizontal and therefore closed.

- When you turn the power back on after the 20-minute period please watch the light on the control module. (It should blink/flash randomly approximately 3 – 14 times and then the light should go off!)
  This shows that the reset was successful and that the unit has recalibrated.

- Once the control module has completed the reset and the light is off, then turn the water back on, by reopening the stop cock. (The brass flat screw should now be vertical.)

- Then pour water down the urinal and it should flush in approximately 8 seconds.

WHEN CHANGING A SOLENOID ENSURE THAT THE STOP COCK IS CLOSED AND THAT THE POWER IS TURNED OFF.

ENSURE THAT YOU DO A COMPLETE RESET AND DO NO REOPEN THE STOP COCK UNTILTHIS PROCESS IS COMPLETED AND THE LIGHT HAS STOPPED BLINKING/FLASHING!

Please also ensure that you do not put a tool on the white solenoid cap, the solenoid valve must be tightened by the brass nut only! (We suggest to hand tighten using the brass nut)



The service plumber or customer will normally call with 1 of 4 possible problems: -

IDENTIFIED PROBLEM

1. Valve will not flush or function.
2. Valve will not shut off / solenoid will not close – constant flushing.
3. Water is spilling out near solenoid valve – water spilling from built in airbrake – holes in the valve below solenoid.
4. Valve flushes then closes and repeats flush without activation.

SOLUTIONS

PROBLEM 1.

(Valve will not flush or function)

- Check to see if the built-in stop cock (isolating valve) is open. When the valve is supplied, the stop cock is closed. The stop cock is the brass flat screw above the solenoid – when it is horizontal the valve is closed, when it is vertical the valve is open.

- Check all cable connections.

- Check transformer for power.

- If the red light on the Electronic Control Module is constantly flashing, then the unit has received a power spike or surge. In this instance the module needs to be unplugged from the transformer and left to reset for a minimum of 20 minutes. When reconnecting the module to the transformer the modules red light should flash only a few times. If the red light is still constantly flashing, then the module is faulty and needs to be replaced.

- If it is not the above two problems, then it is most likely the solenoid valve. The solenoid cannot open and needs replacing.

- If it is not the transformer, E- module or solenoid then the urine sensor at the back of the urinal may be faulty.

PROBLEM 2.

(Valve will not shut off / solenoid will not close – constant flushing)

- Check to that the solenoid plug is connected correctly, if it is plugged in the reverse way then the solenoid will open for a long time, stop and then re-open.

- If the red light on the Electronic Control Module is constantly flashing, then the unit has received a power spike or surge. In this instance the module needs to be unplugged from the transformer and left to reset for a minimum of 20 minutes. When reconnecting the module to the transformer the modules red light should flash only a few times. If the red light is still constantly flashing, then the module is faulty and needs to be replaced.

- If the solenoid is still running after following the first three procedures, then the solenoid needs replacing – this could be due to impurities in the plumbing lines.

PROBLEM 3.

(Water is spilling out near solenoid valve – water is spilling out from airbrake – holes in the valve below solenoid)

- Check if the flush valve is installed upright that is **vertical** as in the diagrams of the instruction manual. If the valve is on its side **horizontal** then water will spill out of the airbrake. Rectify by mounting the valve properly.

- Check if the flush pipe from the base of the valve to the inlet of the urinal is a minimum distance of 500 mm.

- Check to see the flush pipe is vertical from the base of the valve to the urinal inlet. If a plumber has 90° - 45° bends in the flush pipe coming from the base of the valve, then water will back up and spill out of airbrake.

- Check to see that the Kee Seal has not been pinched. If the Kee Seal has been pinched the water cannot flow and will back up and spill out of the airbrake.

- If water is still spilling out and the valve is installed correctly with a straight flush pipe with a minimum length of 500 mm then it could be the Sparge pipe at the inlet of the urinal. If the Sparge pipe is protruding past the Kee Seal, then it may be too long. In this instance the Sparge pipe hits the back of the urinal which means the water cannot spread as intended into the urinal – instead the water may back up in the flush pipe and spill out of the airbrake – in this very rare situation it is the plumbers call but the Sparge pipe may be the cause and may need to be cut back.

PROBLEM 4.

(Valve flushes then closes and repeats without activation)

- It could be that the urine sensor is too sensitive – this can be adjusted by the 2 little dip switches on the Electronic Control Module – if they are both up this is high sensitivity – try reducing to medium sensitivity (one dip switch up and the other down) – or turn the sensitivity right down (both dip switches in the down position).
- Check that pins on the Urine sensor plug connection are not bent or broken.
- If the valve is flushing approx. every 30 seconds by itself then the Urine sensor is faulty and needs replacing.

HF CONTROL MODULE

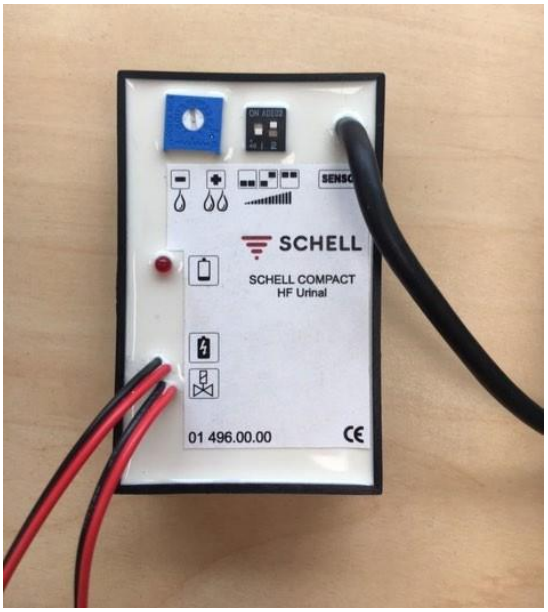

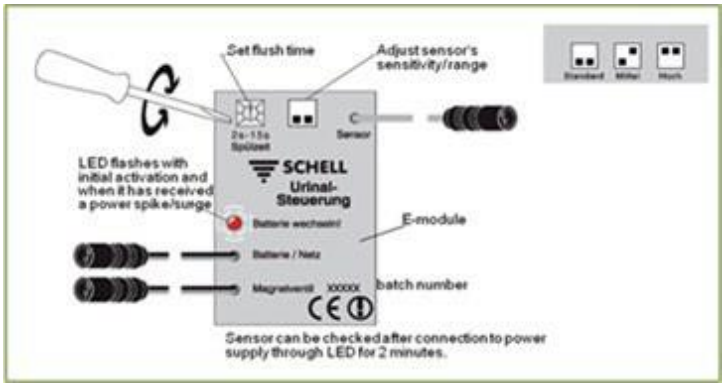

COMPACT HF ELECTRONIC FLUSH VALVE - SPARE PARTS LIST

PRODUCT CODE	DESCRIPTION	PHOTO
011430099	Rough in Set 	
256390099	DR Adapter & Solenoid Valve	
HFTran	HF Transformer	
014950099	HF Compact Sensor 	
230442831	HF Access Cover Plate (No Logo)	
014710099	HF Sensor Extension Lead	
011760099 DISCONTINUED! *Now need to change from HF to RD System using 010170099	HF Control Module 	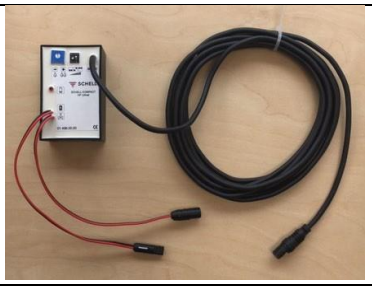

DISCONTINUED - COMPACT HF



NEW - COMPACT RD



IMPORTANT NOTE

The HF Control Module (011760099) has been discontinued, therefore this part needs to be replaced with the New Compact RD Electronic Sensor System (010170099) – Retro Fit Kit.

*Remove HF Control Module	*Remove HF Transformer	*Remove HF Sensor
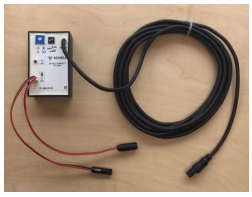		
011760099	HFTran	014950099

***Replace with RD Sensor/Control Module, Extension Cables & New Transformer**

PRODUCT CODE: 010170099 (Compact RD Retro Fit Kit)



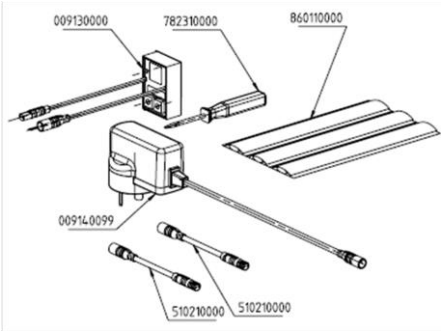

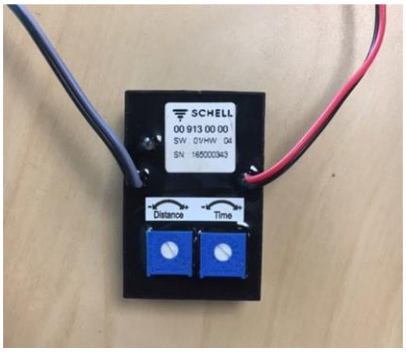

010170099

SCHELL COMPACT RD RETRO FIT KIT – Product Code 010170099 – Used to convert the SCHELL COMPACT HF Electronic Urinal Flush Valve to the SCHELL COMPACT RD Electronic Sensor Urinal Flush Valve

The HF Electronic had a separate Electronic Control Module and Sensor and any stream of liquid once detected by the Sensor would activate the Electronic to flush the urinal.

The RD Electronic has a single Electronic Sensor/Control Module that uses a radar detection system to detect the movement of the user and then flush the urinal.

***The components of the Schell Compact RD Urinal Retro Fit Kit are installed using the existing Water Path, Rough-In Set and DR Adapter and Solenoid Valve.**

***Ensure that you do not remove the existing Control Module Sensor Cable until you have installed the two new Extension Cables.**

1. Remove the urinal from the wall and remove the existing Sensor.
   Note: the new Sensor/Control Module will be positioned at a higher point, above the rim of the urinal.

2. Using electrical tape or cable ties, attach the two new extension cables to the old sensor lead coming from the HF Control Module. Then pull them through the conduit to chase them up behind the wall.
   Note: you will need one male and one female end for correct connection
   Note: you can now completely remove the old HF Control Module

3. Disconnect the Solenoid from the old HF Control Module.

4. Remove the old HF Transformer and replace with the new RD Transformer supplied.

5. Connect first Extension Cable to the existing Solenoid and the other Extension Cable to the new RD Transformer.

6. Attach the RD Electronic Sensor/Control Module to the back of the urinal, using the supplied adhesive strip.
   Note: Refer to Sensor Installation on page three of complete installation instructions.
   - The adhesive must be applied to the sides of the sensor housing only
   - There must be no adhesive between the sensor housing and the urinal wall
   - The Sensor/Electronic must be placed at a level above the height of the front rim of the urinal

7. Connect the Extension Cables to the Sensor/Control Module.

8. Please use this detail in conjunction with the complete Assembly and Installation Instructions for the SCHELL COMPACT RD Electronic Sensor Urinal Valve.