

SENTIQUE 5323 36/37

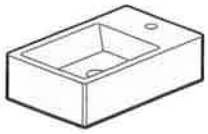

MEMENTO 5333 xx

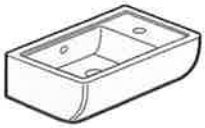

OMNIA architectura 5373 35/36

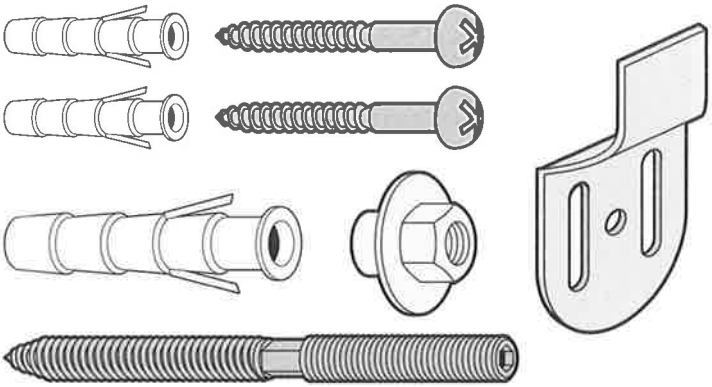

1

SENTIQUE = **245 mm**
MEMENTO = **280 mm**
OMNIA arch. = **240 mm**

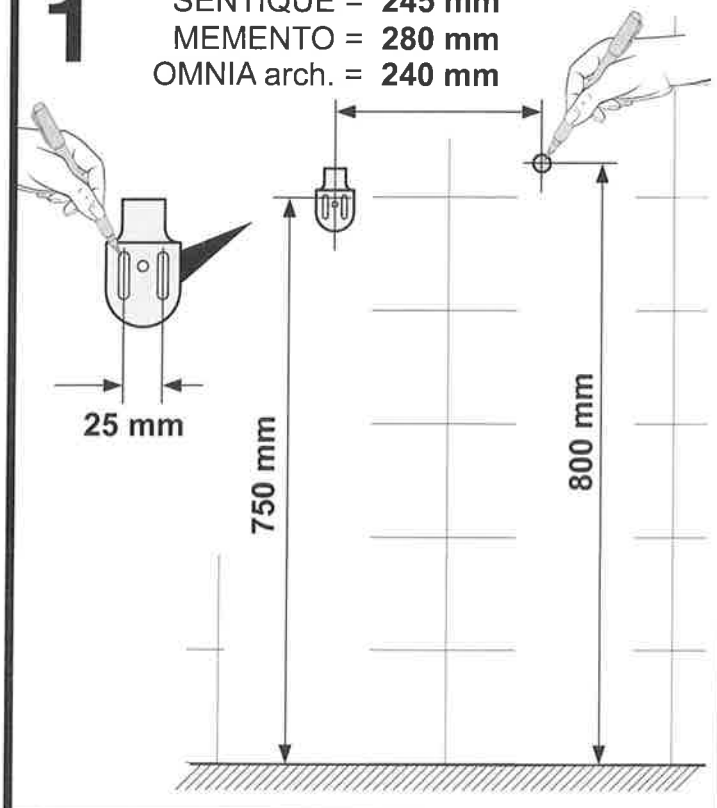

2

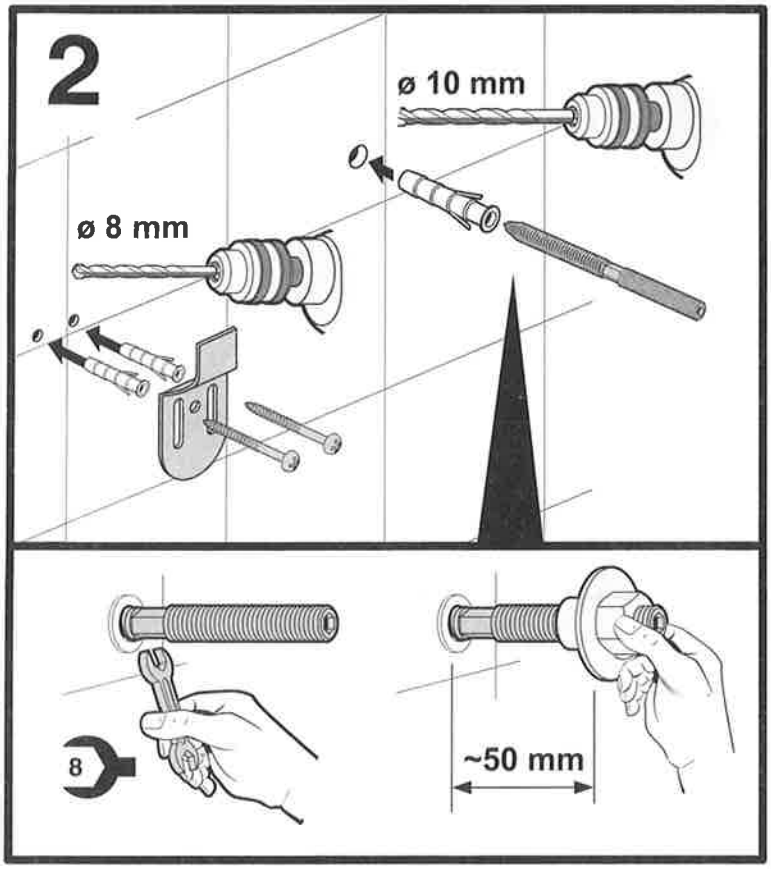

3

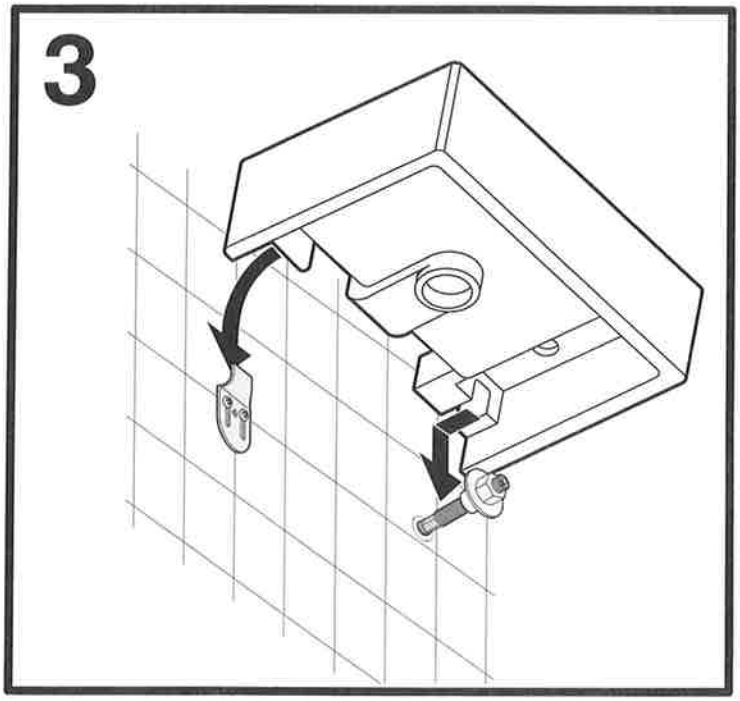

4

